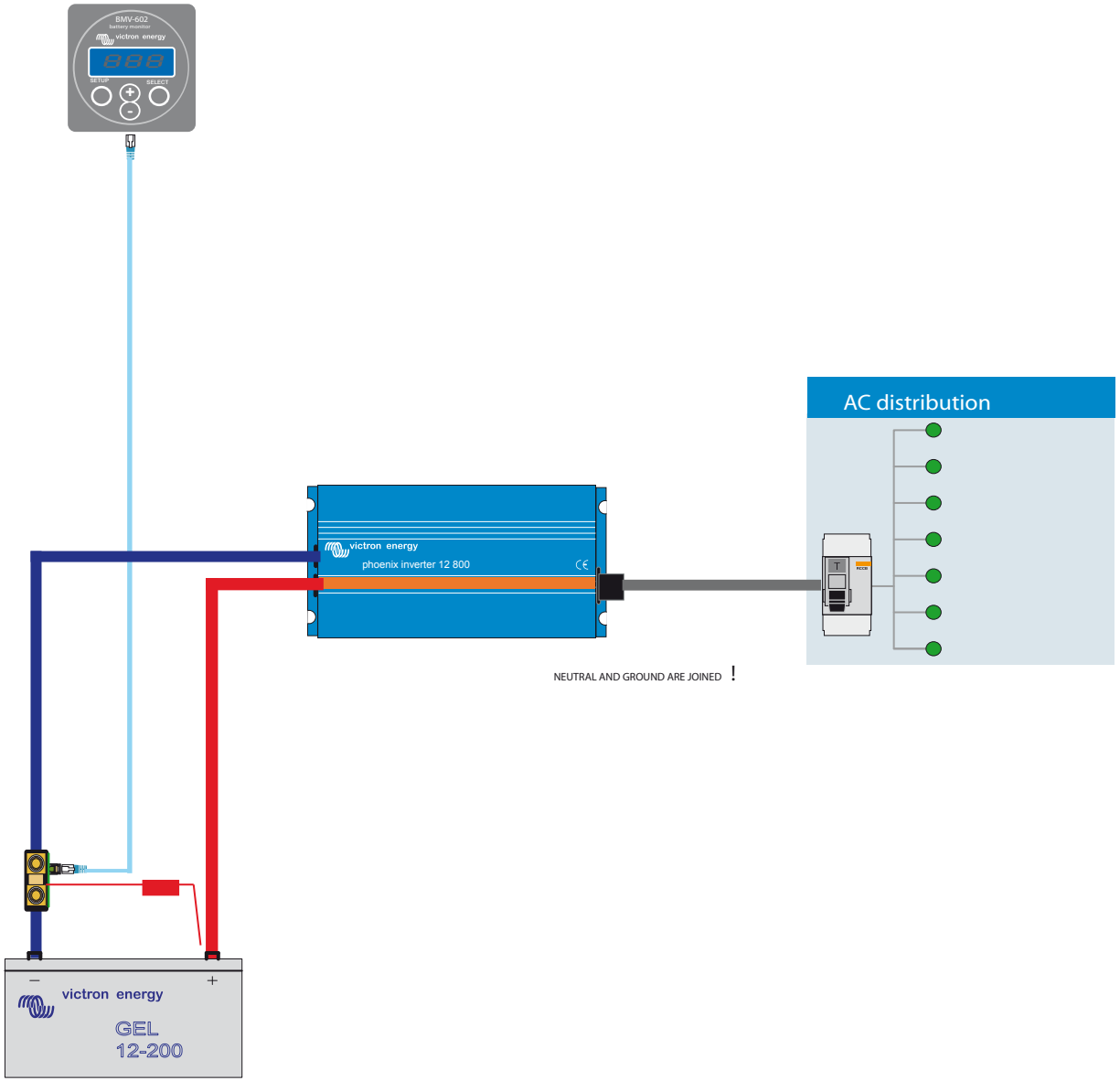
BMV-602
battery monitor
victron energy
SETUP
SELECT
AC distribution
victron energy
phoenix inverter 12 800
NEUTRAL AND GROUND ARE JOINED !
victron energy
GEL
12-200